CONTENTS

Usage Notice 2
Safety Instructions 2
Introduction 5
Projector Features 5
Package Contents 6
Projector Overview 7
Using the Product 9
Control Panel 9
Connection Ports 10
Remote Control 12
Installing the Batteries 15
Remote Control Operation 16
Connection 17
Connecting a computer 19
Connecting Video source devices 20
Operation 23
Powering On/Off the Projector 23
Adjusting the Projector Height 24
Adjusting the Projector Zoom and Focus 24
Adjusting Projection Image Size 25
Menu Operation 27
Appendix 50
Installing the Dust Filter (Optional accessory) 50
Replacing the Lamp 51
Ceiling mount installation 53
Compatibility Modes 54
RS232 Commands and Protocol Function List 59
Troubleshooting 64
Optoma Global Offices 66
Regulation & Safety Notices 69

Usage Notice

Safety Instructions

Read all of these instructions before you operate your projector and save for future reference.

1. Read instructions
   All the safety and operating instructions should be read before the appliance is operated.
2. Notes and warnings
   All notes and warnings in the operating instructions should be adhered to.
3. Cleaning
   Unplug the projector from the wall socket before cleaning. Use a damp cloth for cleaning the projector housing. Do not use liquid or aerosol cleaners.
4. Accessories
   Do not place this product on an unstable cart, stand, or table. The product may fall, causing serious damage to the product.
   Keep the plastic packing materials (from the projector, accessories and optional parts) out of the reach of children as these bags may result in death by suffocation. Be particularly careful around the small children.
5. Ventilation
   The projector is equipped with ventilation holes (intake) and ventilation holes (exhaust). Do not block or place anything near these slots, or internal heat build-up may occur, causing picture degradation or damage to the projector.
6. Power sources
   Check that the operating voltage of your unit is identical with the voltage of your local power supply.
7. Servicing
   Do not attempt to service this projector yourself. Refer all servicing to qualified service personnel.

8. Replacement parts
   When replacement parts are required, be sure that the replacement parts are specified by the manufacture. Unauthorized substitutions may result in fire, electric shock or other hazards.

9. Moisture Condensation
   Never operate this projector immediately after moving it from a cold location to a warm one. When the projector is exposed to such a change in temperature, moisture may condense on the lens and the crucial internal parts. To prevent the unit from possible damage, do not use the projector for at least 2 hours when there is an extreme or sudden change in temperature.

10. Warning — Not all projectors come with a lens cap. For your safety, if the projector is equipped with a lens cap please ensure to remove it before you turn on the projector.

Notes on the AC Power Cord

AC Power Cord must meet the requirement of countries where you use this projector. Please confirm your AC plug type with the graphics below and ensure that the proper AC Power Cord is used. If the supplied AC Power Cord does not match your AC outlet, please contact your sales dealer. This projector is equipped with a grounding type AC line plug. Please ensure that your outlet fits the plug. Do not defeat the safety purpose of this grounding type plug. We highly recommend using a video source device also equipped with a grounding type AC line plug to prevent signal interference due to voltage fluctuations.

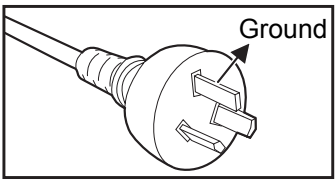

For Australia and Mainland China

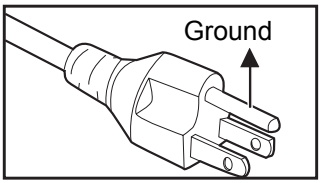

For the U.S.A. and Canada

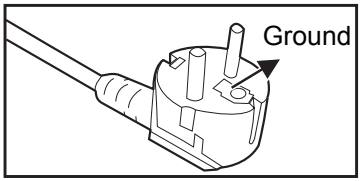

For Continental Europe

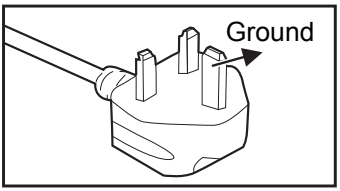

For the U.K.

Introduction

Projector Features

The projector integrates high-performance optical engine projection and a user - friendly design to deliver high reliability and ease of use.
The projector offers the following features:

- DLP® technology
- SVGA (800 x 600 pixels)
- XGA (1024 x 768 pixels)
- WXGA (1280 x 800 pixels)
- Equipped with VGA connector
- Equipped with HDMI connector
- Compatibility with Macintosh® computers
- Compatibility with NTSC, PAL, SECAM and HDTV
- D-Sub 15-pin terminal for analog video connectivity
- User-friendly, multi-language on-screen display
- Advanced electronic keystone correction
- RS-232 connector for serial control
- Quick Resume feature
- Eco+ mode for more economic usage
- Full 3D

Note

- *The information in this manual is subject to change without notices.*
- *The reproduction, transfer or copy of all or any part of this document is not permitted without express written consent.*
- *Functions vary depending on model definition.*

Package Contents

When you unpack the projector, make sure you have all these components:

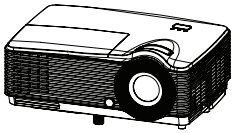

Projector

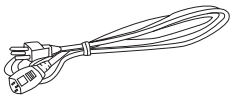

AC Power Cord

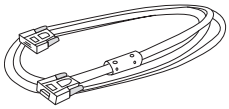

*VGA Cable
(D-SUB to D-SUB)

*HDMI Cable

Remote Control (IR) &
batteries (AAA *2 PCS)

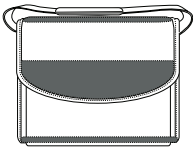

*Carry Bag

*Dust filter

☑User's Manual
☑Warranty Card
☑Quick Start Card

Documentation

Note

- *For European warranty information please visit www.optomaeurope.com*
- *Due to the difference in applications for each country, some regions may have different accessories.*
- *Contact your dealer immediately if any items are missing, appear damaged, or if the unit does not work.*
- *Save the original shipping carton and packaging material; they will come in handy if you ever need to ship your unit. For maximum protection, repack your unit as it was originally packed at the factory.*
- *(*) Optional accessory. Depends on model specifications and by region.*

Projector Overview

Front View

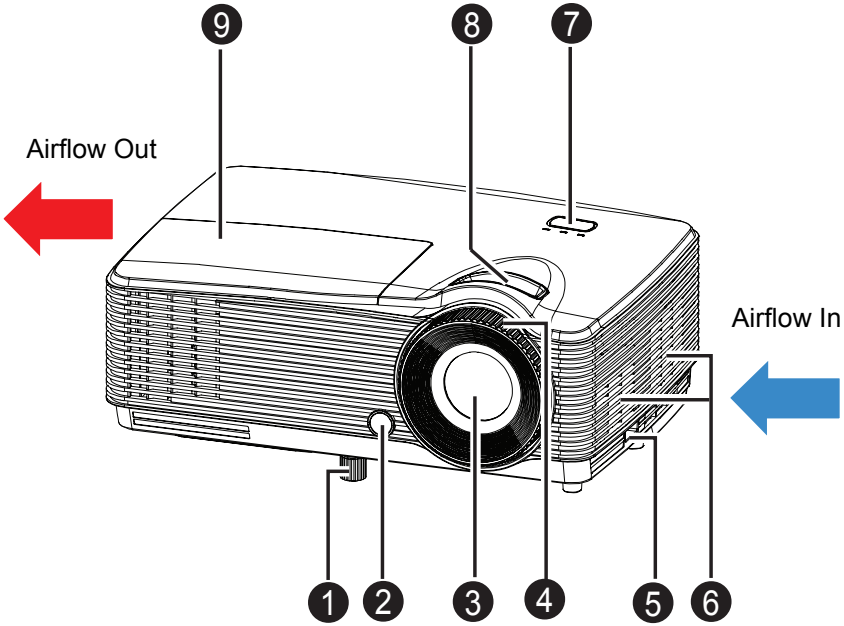

1. Elevator foot
2. Front IR remote control sensor
3. Projection lens
4. Focus ring
5. Security bar
6. Ventilation holes
7. Control panel
8. Zoom ring
9. Lamp cover

Bottom View

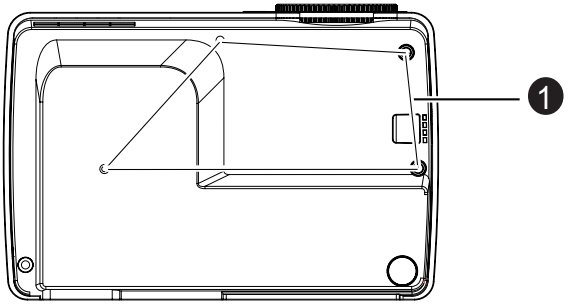

❶ Ceiling mount holes

Note

- *This projector can be used with a ceiling mount for support. The ceiling mount is not included in the package.*
- *Contact your dealer for information to mount the projector on a ceiling.*

Using the Product

Control Panel

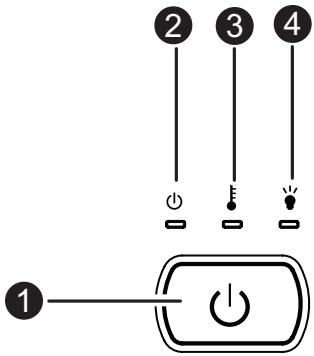

❶ ⏻ **Power**
Turn the projector on or off.

❷ ⏻ **(Power LED indicator)**
Refer to “LED Indicator Messages” on page 65.

❸ **(Temperature LED indicator)**
Refer to “LED Indicator Messages” on page 65.

❹ **(Lamp LED indicator)**
Refer to “LED Indicator Messages” on page 65.

Connection Ports

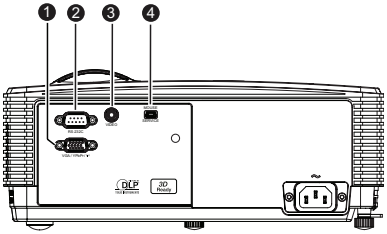

(Type 1-SVGA)

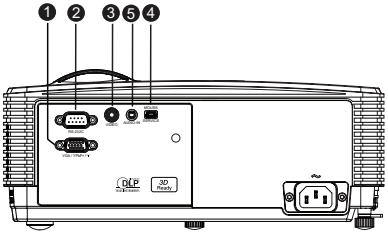

(Type 2-XGA)

❶ **VGA/YPbPr/**
Connect image input signal (analog RGB or component) to this jack. Support wireless dongle via internal power of VGA.

❷ **RS-232C**
When operating the projector via a computer, connect this to the controlling computer's RS-232C port.

❸ **VIDEO**
Connect composite video output from video equipment to this jack.

❹ **MOUSE/SERVICE**
This connector supports firmware update, remote mouse and page up/ down.

❺ **AUDIO-IN**
Connect an audio output from a video device to this jack connector.

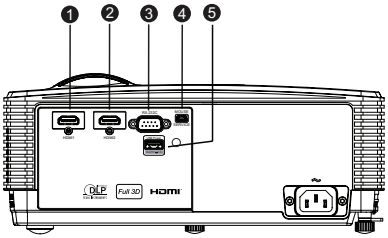

(Type 3-SVGA)

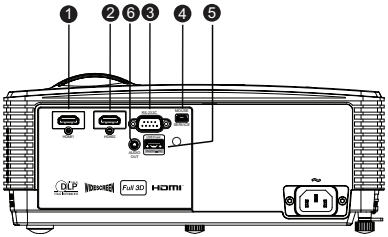

(Type 4-WXGA)

❶ **HDMI1**
Connect HDMI output from video equipment to this jack.

❷ **HDMI2**
Connect HDMI output from video equipment to this jack.

❸ **RS-232C**
When operating the projector via a computer, connect this to the controlling computer's RS-232C port.

❹ **MOUSE/SERVICE**
This connector supports firmware update, remote mouse and page up/ down.

❺ **USB Power Out (5V DC 1A)**
Power charging (5V DC 1A).

■***Do not connect devices that require or draw more power than 5v 1A. Over drawing can cause damage and create safety concerns.***

❻ **AUDIO-OUT**
Connect to an external speaker system.
Audio loop through is supported for HDMI1/HDMI2.
In Eco mode (Standby), AUDIO-OUT is disabled.
In Active mode (Standby), AUDIO-OUT is enabled.

Remote Control

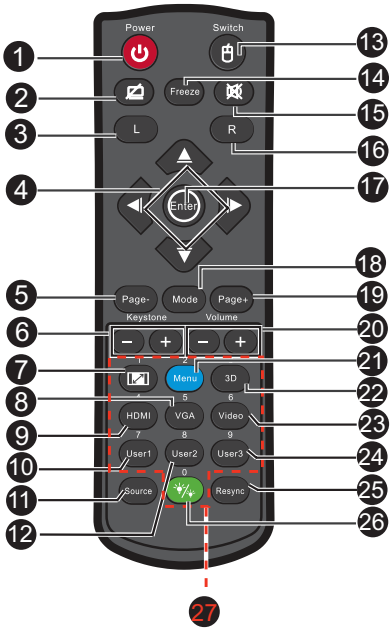

❶ **Power**
Turn the projector on or off.

❷ **Blank & Audio mute**
Momentarily blanks video and mutes audio.

❸ **Left mouse**
Perform the left button of the mouse when mouse mode is activated.

❹ **Four directional buttons**
Use four directional buttons to select items or make adjustments to your selection.
"UP" key: When menu is off, up key for emulation of USB mouse.
"Left" key: When menu is off, left key for emulation of USB mouse.
"Right" key: When menu is off, right key for emulation of USB mouse.
"Down" key: When menu is off, down key for emulation of USB mouse.

❺ **Page-**
Perform page down function when mouse mode is activated.

❻ **Keystone (+/-)**
Manually correct distorted images resulting from an angled projection.

❼ **Format**
Selects the display aspect ratio.

❽ **VGA**
Display VGA signal.

❾ **HDMI**
Display HDMI signal.

❿ **User1**
User1 definable key for customized function.

⓫ **Source**
Switch between input signals.

⓬ **User2**
User2 definable key for customized function.

⓭ **Switch**
Activate/de-activate remote mouse function.

⓮ **Freeze**
Freeze the projected image.

⓯ **Mute**
Momentarily turns off/on the audio.

⓰ **Right mouse**
Perform the right button of the mouse when mouse mode is activated.

⓱ **Enter**
Enter key for emulation of USB mouse via USB.

⓲ **Mode**
Display mode menu on/off.

⓳ **Page+**
Perform page up function when mouse mode is activated.

⓴ **Volume (+/-)**
Adjust the volume level.

㉑ **Menu**
Display on-screen display menus.

㉒ **3D**
Turn on or off 3D function.

㉓ **Video**
Display video signal.

㉔ **User3**
User3 definable key for customized function.

㉕ **Re-SYNC**
Automatically synchronize the projector to the input source.

㉖ **Brightness mode**
Display brightness mode menu on/off

㉗ **Numbered keypad**
Press 0 to 9 to enter a password when required.

Note

- *Remote Control (IR) or Remote Control with Laser Pointer (depending on region). See Appendix for the Remote with Laser Pointer.*

Using the remote mouse control

The capability of operating your computer with the remote control gives you more flexibility when delivering presentations.

1. Connect the projector to your PC or notebook with a USB cable prior to using the remote control in place of your computer's mouse. See "Connecting a computer" on page 19 for details.
2. Set the input signal to **VGA**.
3. Press switch button to turn on mouse function. Mouse icon will appear on the screen confirming the activation of the mouse.
4. Perform the desired mouse controls on your remote control.
   - To move the cursor on the screen, press ▲/ ▼/ ◄/► .
   - To left-click, press **L**.
   - To right-click, press **R**.
   - To return to the normal mode, press **Switch** again.

Note

- *HDMI also supports mouse function.*
- *OSD must be closed before turning on the mouse function.*

Installing the Batteries

1. Open the battery cover in the direction shown.

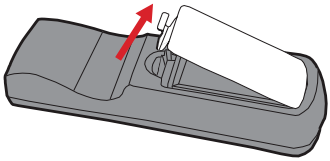

2. Install batteries as indicated by the diagram inside the compartment.

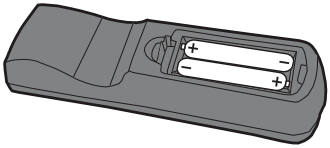

3. Close the battery cover into position.

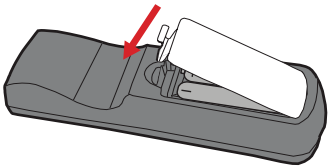

Caution

- *Risk of explosion if battery is replaced by an incorrect type.*
- *Dispose of used batteries according to the instructions.*
- *Make sure the plus and minus terminals are correctly aligned when loading a battery.*

Note

- *Keep the batteries out of the reach of children. There is a danger of death by accidentally swallowing the batteries.*
- *Remove batteries from remote control when not using for extended periods.*
- *Dispose batteries according to local regulations.*
- *Do not mix old batteries with new ones and ensure the batteries are inserted according to the polarity on the remote. Battery may leak or explode if installed incorrectly.*
- *Batteries should not be in or near to fire or water, keep batteries in a dark, cool and dry place.*
- *If suspect battery leakage, wipe out the leakage and then replace new batteries. If the leakage adheres to your body or clothes, rinse well with water immediately.*

Remote Control Operation

Point the remote control at the infrared remote sensor and press a button.

- Operating the projector from the front

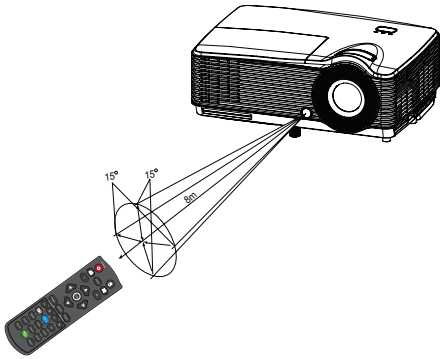

Note

- *The remote control may not operate when there is sunlight or other strong light such as a fluorescent lamp shining on the remote sensor.*
- *Operate the remote control from a position where the remote sensor is visible.*
- *Do not drop the remote control or jolt it.*
- *Keep the remote control out of locations with excessively high temperature or humidity.*
- *Do not get water on the remote control or place wet objects on it.*
- *Do not disassemble the remote control.*

Connection

When connecting a signal source to the projector, be sure to:

1. Turn all equipment off before making any connections.
2. Use the correct signal cables for each source.
3. Ensure the cables are firmly inserted.

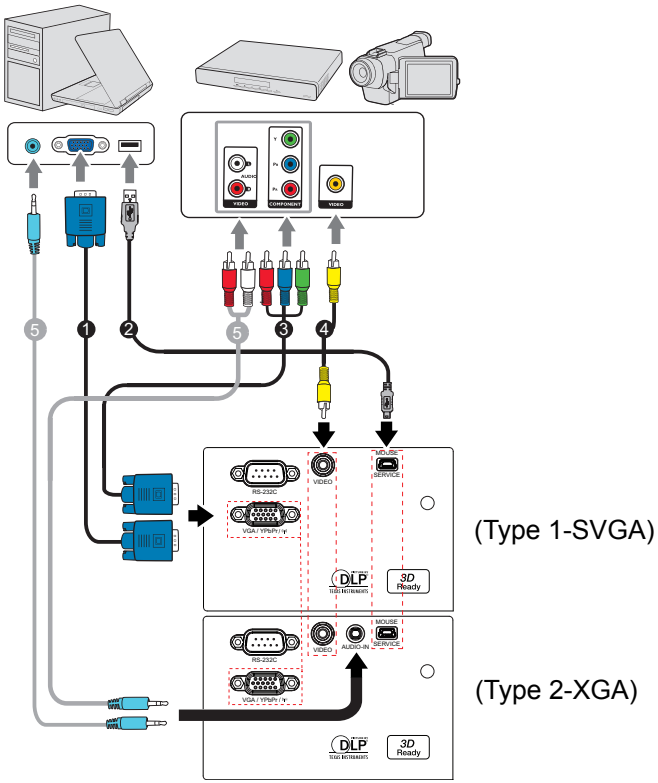

1. ..... *VGA cable (D-Sub to D-Sub)
2. .....*USB cable
3. ..... *VGA (D-Sub) to HDTV (RCA) cable
4. ..... *Composite Video cable
5. .....*Audio cable

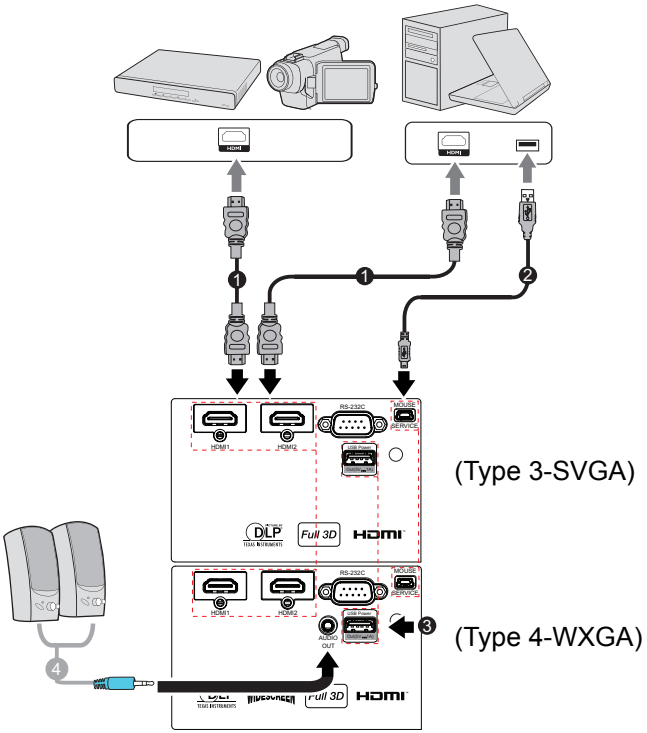

1. .....*HDMI cable
2. .....*USB cable
3. ..... USB port for power charging
4. ..... *Audio cable

Note

- *Due to the difference in applications for each country, some regions may have different accessories.*
- *(*) Optional Accessory*

Connecting a computer

Connecting a computer

The projector provides two VGA input sockets that allow you to connect them to both IBM® compatible and Macintosh® computers. A Mac adapter is needed if you are connecting legacy version Macintosh computers.

To connect the projector to a notebook or desktop computer:

1. Take the supplied VGA cable and connect one end to the D-Sub output socket of the computer.
2. Connect the other end of the VGA cable to the **VGA/YPbPr** signal input socket on the projector.

☞ **Important**

■*Many notebooks do not turn on their external video ports when connected to a projector. Usually a key combo like FN + F3 or CRT/LCD key turns the external display on/off. Locate a function key labeled CRT/LCD or a function key with a monitor symbol on the notebook. Press FN and the labeled function key simultaneously. Refer to your notebook's documentation to find your notebook's key combination.*

Connecting Video source devices

You can connect your projector to various Video source devices that provide any one of the following output sockets:

- HDMI
- Component Video
- Video (composite)

You need only connect the projector to a Video source device using just one of the above connecting methods, however each provides a different level of video quality. The method you choose will most likely depend upon the availability of matching terminals on both the projector and the Video source device as described below:

Terminal name	Terminal appearance	Reference	Picture quality
HDMI	HDMI	“Connecting an HDMI source device” on page 21	Best
Component Video	VGA/YPbPr	“Connecting a Component Video source device” on page 21	Better
Video	VIDEO	“Connecting a composite Video source device” on page 22	Normal

Connecting an HDMI source device

Examine your Video source device to determine if it has a set of unused HDMI output jacks available:

- If so, you can continue with this procedure.
- If not, you will need to reassess which method you can use to connect to the device.

To connect the projector to an HDMI source device:

1. Take an HDMI cable and connect one end to the HDMI output jack of the HDMI source device.
2. Connect the other end of the HDMI cable to the HDMI jack on the projector.

Connecting a Component Video source device

Examine your Video source device to determine if it has a set of unused Component Video output sockets available:

- If so, you can continue with this procedure.
- If not, you will need to reassess which method you can use to connect to the device.

To connect the projector to a Component Video source device:

1. Take a VGA (D-Sub) to HDTV (RCA) cable and connect the end with 3 RCA type connectors to the Component Video output sockets of the Video source device. Match the color of the plugs to the color of the sockets; green to green, blue to blue, and red to red.
2. Connect the other end of the cable (with a D-Sub type connector) to the **VGA/YPbPr** socket on the projector.

☞ **Important**

- *If the selected video image is not displayed after the projector is turned on and the correct video source has been selected, check that the Video source device is turned on and operating correctly. Also check that the signal cables have been connected correctly.*

Connecting a composite Video source device

Examine your Video source device to determine if it has a set of unused composite Video output sockets available:

- If so, you can continue with this procedure.
- If not, you will need to reassess which method you can use to connect to the device.

To connect the projector to a composite Video source device:

1. Take a Video cable and connect one end to the composite Video output socket of the Video source device.
2. Connect the other end of the Video cable to the **VIDEO** socket on the projector.

☞ **Important**

- *If the selected video image is not displayed after the projector is turned on and the correct video source has been selected, check that the Video source device is turned on and operating correctly. Also check that the signal cables have been connected correctly.*
- *You need only connect to this device using a composite Video connection if Component Video and S-Video inputs are unavailable for use. See* *"Connecting Video source devices" on page 20* *for details.*

Operation

Powering On/Off the Projector

Powering On the Projector:

1. Connect the AC power cord and relevant peripheral signal cable(s) to the projector.
2. Press ⏻ to turn on the projector.
   The projector takes a minute or so to warm up.
3. Turn on your source (computer, notebook, DVD, etc.). The projector automatically detects your source.
   - If you are connecting multiple sources to the projector simultaneously, press **Source** on the remote control to select your desired signal or press your desired signal key on the remote control.

⚠ **Warning**

- *Never look into the lens when the lamp is on. This can damage your eyes.*
- *This focal point concentrates high temperature. Do not place any object near it to avoid possible fire hazard.*

Powering Off the Projector:

1. Press ⏻ to turn off the projector lamp. You will see a message "Power off? Press Power again" appear on the screen.
2. Press ⏻ again to confirm.
   - The cooling fans continue to operate for cooling cycle.
   - When the Power LED becomes steady red, the projector has entered stand-by mode.
   - If you want to turn the projector back on, you must wait until the projector has completed the cooling cycle and has entered stand-by mode. Once in stand-by mode, simply press ⏻ to restart the projector.
3. Disconnect the AC power cord from the electrical outlet and the projector.
4. Do not turn on the projector right after power off.

⚠ **Warning**

- *When Quick Resume is on, if turning off the projector accidentally and Quick Resume selected within a period of 100 seconds, the projector will instantly power on again.*
- *When Quick Resume is off, if turning off the projector, users need to wait until the cooling process is finished and then restart the projector. It will take a few minutes because the fan will keep running until the internal temperature is reduced to certain level.*

Adjusting the Projector Height

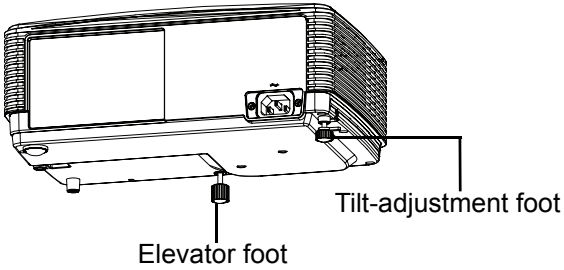

The projector is equipped with an elevator foot to adjust the image height.

1. To raise or lower the image, turn the elevator foot.
2. To level the image on the screen, turn the tilt-adjustment foot to fine-tune the height.

Note

- *To avoid damaging the projector, make sure that the elevator foot and tilt-adjustment foot are fully retracted before placing the projector in its carrying case.*

Adjusting the Projector Zoom and Focus

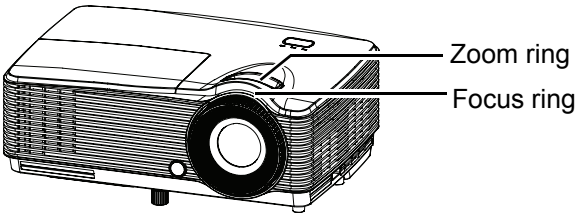

1. Focus the image by rotating the focus ring. A still image is recommended for focusing.
2. Adjust the image size by rotating the zoom ring.

Adjusting Projection Image Size

Refer to the graphic and table below to determine the screen size and projection distance.

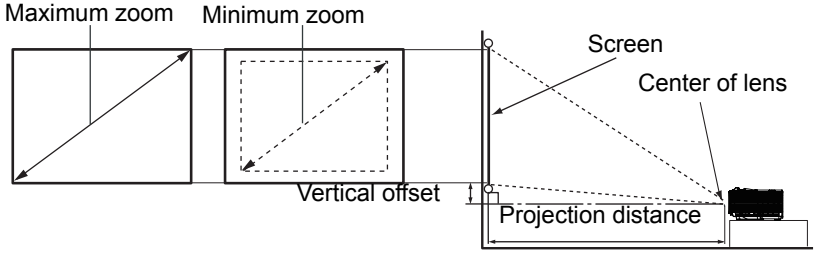

SVGA/XGA

Screen size Diagonal [inch (cm)]	4 : 3 Screen			
	Projection distance [feet (m)]		Image height [inch (cm)]	Vertical offset [inch (cm)]
	(min. zoom)	(max. zoom)		
30 (76)	3.83 (1.17)	4.33 (1.32)	18 (46)	2.7 (7)
40 (102)	5.17 (1.57)	5.75 (1.75)	24 (61)	3.6 (9)
60 (152)	7.83 (2.39)	8.67 (2.64)	36 (91)	5.4 (14)
80 (203)	10.42 (3.18)	11.58 (3.53)	48 (122)	7.2 (18)
100 (254)	13.08 (3.99)	14.58 (4.45)	60 (152)	9.0 (23)
120 (305)	15.75 (4.80)	17.5 (5.33)	72 (183)	10.8 (27)
150 (381)	19.67 (5.99)	21.83 (6.65)	90 (229)	13.5 (34)
200 (508)	26.25 (8.00)	29.17 (8.89)	120 (305)	18.0 (46)
250 (635)	32.83 (10.00)	36.5 (11.13)	150 (381)	22.5 (57)
300 (762)	39.42 (12.01)	43.75 (13.34)	180 (457)	27.0 (69)

WXGA

Screen size Diagonal [inch (cm)]	16:10 Screen			
	Projection distance [feet (m)]		Image height [inch (cm)]	Vertical offset [inch (cm)]
	(min. zoom)	(max. zoom)		
30 (76)	3.08 (0.94)	3.92 (1.19)	16 (40)	2.4 (6)
40 (102)	4.12 (1.27)	5.17 (1.57)	21 (54)	3.2 (8)
60 (152)	6.33 (1.93)	7.83 (2.39)	32 (81)	4.8 (12)
80 (203)	8.42 (2.57)	10.5 (3.20)	42 (108)	6.4 (16)
100 (254)	10.58 (3.23)	13.08 (3.99)	53 (135)	7.9 (20)
120 (305)	12.75 (3.89)	15.75 (4.80)	64 (162)	9.5 (24)
150 (381)	15.92 (4.85)	19.67 (5.99)	79 (202)	11.9 (30)
200 (508)	21.25 (6.48)	26.25 (8.00)	106 (269)	15.9 (40)
250 (635)	26.58 (8.10)	32.83 (10.01)	132 (336)	19.9 (50)
300 (762)	31.92 (9.73)	39.42 (12.01)	159 (404)	23.8 (61)

Note

- *Position the projector in a horizontal position; other positions can cause heat build-up and damage to the projector.*
- *Keep a space of 30 cm or more between the sides of the projector.*
- *Do not use the projector in a smoky environment. Smoke residue may build-up on critical parts and damage the projector or its performance.*
- *Consult with your dealer for special installation such as suspending from a ceiling.*

Menu Operation

The projector has multilingual on-screen display menus that allow you to make image adjustments and change a variety of settings.

How to operate

1. To open the OSD menu, press “Menu” on the Remote Control.
2. When OSD is displayed, use ◄/► key to select to select any item in the main menu. While making a selection on a particular page, press ▼ or “Enter key to enter sub menu.
3. Use ▲/▼ key to select the desired item and press ◄/►/”Enter” key to enter the Single-Item-Menu.
4. Use the ◄/► key to adjust the value. Use “Enter” to confirm the selection.
5. Select the next item to be adjusted in the sub menu and adjust as described above.
6. Press ”Menu” to go back to Sub-Menu.
7. To exit, press “Menu” again. The OSD menu will close and the projector will automatically save the new settings.

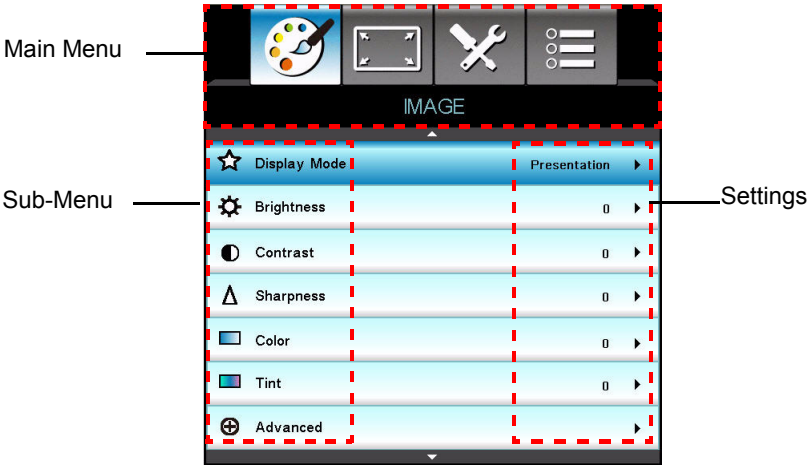

Menu tree

Main Menu	Sub-Menu			Single-Item Menu
IMAGE	Display Mode			SVGA/XGA: Presentation / Bright / Movie / sRGB / Blackboard / User / 3D
				WXGA: Presentation / Bright / Movie / sRGB / Blackboard / User / 3D/ Game / ISF day / ISF night
	Brightness			
	Contrast			
	Sharpness			
	Color			
	Tint			
	Advanced	Gamma		SVGA/XGA: Film / Video / Graphics / Standard
				WXGA: Film / Video / Graphics / 2.2 / 1.8 / 2.0 / 2.6
		BrilliantColor™		1 to 10
		Color Temp.		Warm / Standard / Cool / Cold
		Color Settings	Red	Hue / Saturation / Gain
			Green	Hue / Saturation / Gain
			Blue	Hue / Saturation / Gain

IMAGE	Advanced	Color Settings	Cyan	Hue / Saturation / Gain
			Magenta	Hue / Saturation / Gain
			Yellow	Hue / Saturation / Gain
			White	Red / Green / Blue
			Reset	
			Exit	
		Color Space		Not HDMI Input: Auto / RGB / YUV
				HDMI Input: Auto / RGB (0~255) / RGB (16~235) YUV
		Signal	Automatic	On / Off
			Phase (VGA)	
			Frequency (VGA)	
			H. Position (VGA)	
			V. Position (VGA)	
			Exit	
		Exit		
	Reset			Yes / No

DISPLAY	Format			SVGA/XGA: 4:3 / 16:9 / Native / Auto
				WXGA: 4:3 / 16:9 or 16:10 / LBX / Native / Auto
	Edge Mask			
	Zoom			
	Image Shift	H		
		V		
	V Keystone			
	3D	3D Mode		Off / DLP-Link
		3D--->2D		3D / L / R
		3D Format		Auto / SBS / Top and Bottom / Frame Sequential
		3D Sync Invert		On / Off

SETUP	Language			English / Deutsch / Français / Italiano / Español / Português / Svenska / Nederlands / Norsk/Dansk / Polski / Русский / Suomi / ελληνικά / Magyar / Čeština / عربي 繁體中文 / 簡体中文 / 日本語 / 한국어 / ไทย / Türkçe / Farsi / Vietnamese / Romanian / Indonesian
	Projection			
	Menu Location			
	Screen Type (WXGA)			16: 10/16:9
	Security	Security		On / Off
		Security Timer		Month / Day / Hour
		Change Password		
		Exit		
	Projector ID			
	Audio Settings (Type 2/3/4)	Mute		On / Off
		Volume		
	Advanced	Logo		Default / Neutral
		Closed Captioning		Off / CC1 / CC2
		Exit		

OPTIONS	Input Source			(Type1/2): VGA/Video
				(Type3/4): HDMI1/ HDMI2
	Source Lock			On / Off
	High Altitude			On / Off
	Information Hide			On / Off
	Keypad Lock			On / Off
	Test Pattern			None / Grid / White
	HDMI Link Settings (Type3/4)	HDMI Link		On / Off
		Inclusive of TV		Yes / No
		Power On Link		Mutual / PJ -> Device / Device -> PJ (only on Standby mode > Active)
		Power Off Link		Off / On
		Exit		
	Background Color			Black / Red / Blue / Green / White

OPTIONS	Remote Settings	User 1		(Type1/2): Brightness/ Contrast/ Zoom/Test pattern
				(Type3/4): Brightness/ Contrast/ Zoom/Test pattern/HDMI 2/HDMI Link
		User 2		(Type1/2): Brightness/ Contrast/ Zoom/Test pattern
				(Type3/4): Brightness/ Contrast/ Zoom/Test pattern/HDMI 2/HDMI Link
		User 3		(Type1/2): Brightness/ Contrast/ Zoom/Test pattern
				(Type3/4): Brightness/ Contrast/ Zoom/Test pattern/HDMI 2/HDMI Link

OPTIONS	Advanced	Direct Power On		On / Off
		Auto Power Off (min.)		
		Sleep Timer (min.)		
		Quick Resume		On / Off
		Power Mode (Standby)		Active / Eco
	Lamp Settings	Lamp Hour		
		Lamp Reminder		On / Off
		Brightness Mode		Bright / Eco / Dynamic / Eco+
		Lamp SPA Mode		On/ Off
		Lamp Reset		Yes / No
		Exit		
	Optional Filter Settings	Optional Filter Installed		Yes / No
		Filter Usage Hours		
		Filter Reminder		On / Off
		Filter Reset		Yes / No
		Exit		
	Reset			Yes / No

IMAGE

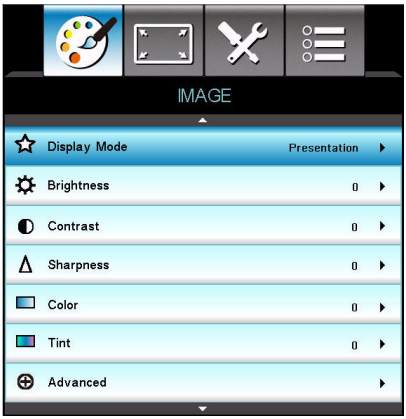

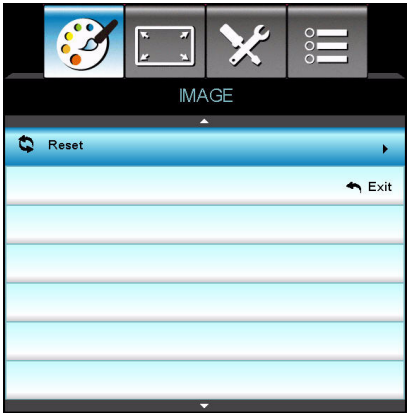

Display Mode

There are many factory presets optimized for various types of images.

- Presentation: Good color and brightness from PC input.
- Bright: Maximum brightness from PC input.
- Moive: For home theater.
- sRGB: Standardised accurate color.
- Blackboard: This mode should be selected to achieve optimum color settings when projecting onto a blackboard (green).
- User: User's settings.
- 3D: Recommended setting for 3D mode. Any further adjustments by the user in 3D will be saved in this mode for further use.
- Game: Game: For game content.
- ISF Day: Optimize the image with the ISF Day mode to be perfectly calibrated and high picture quality.
- ISF Night: Optimize the image with the ISF Night mode to be perfectly calibrated and high picture quality.

Note

- *"ISF Day" and "ISF Night" will not be shown when the ISF modes have not been calibrated.*
- *Only type 4 equips with "Game", "ISF Day" and "ISF Night".*

Brightness

Brighten or darken the image.

Contrast
Set the difference between light and dark areas.

Sharpness
Sharpen or soften the image.

Color
Adjust a video image from black and white to fully saturated color.

Tint
Shift colors toward red or green.

Note
- *"Color" and "Tint" functions are only supported under Video mode.*

Advanced

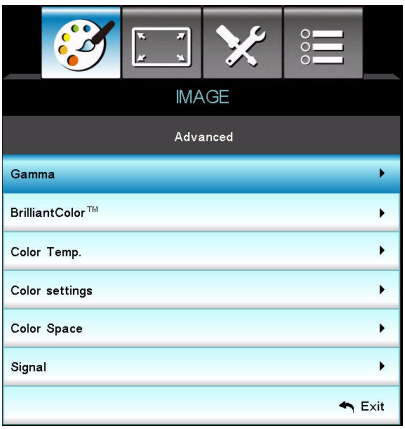

Gamma
This allows you to choose a degamma table that has been fine-tuned to bring out the best image quality for the input.
- Film: for home theater.
- Video: for video or TV source.
- Graphics: for image source.
- Standard: for PC or computer source.
- 2.2/1.8 /2.0/2.6: for WXGA only.

BrilliantColor™
This adjustable item utilizes a new color-processing algorithm and system level enhancements to enable higher brightness while providing true, more

vibrant colors in picture. The range is from “1” to “10”. If you prefer a stronger enhanced image, adjust toward the maximum setting. For a smoother, more natural image, adjust toward the minimum setting.

Color Temp.

If set to cold temperature, the image looks more blue. (cold image)
If set to medium temperature, the image maintains normal colorings for white.
If set to warm temperature, the image looks more red. (warm image)

Color Settings

Press ◄/►/“Enter” key to enter the next menu as below and then use ▲/▼/◄/► key to select color. Press “Enter” to finalize the selection.

- Red/Green/Blue/Cyan/Magenta/Yellow/White: Use ▲/▼ to toggle Hue/Saturation/Gain and then use ◄/► to adjust the value.
- Reset: Choose “Yes” to return the factory default settings for color adjustments.

Color Space

Select an appropriate color matrix type from AUTO, RGB or YUV.

Signal

- Automatic: Automatically selects the singal. If you use this function, the Phase, frequency items are grayed out, and if Signal is not automatic, the phase, frequency items will appear for user to manually tune and saved in settings after that for next time projector turns off and on again.
- Phase: Synchronize the signal timing of the display with the graphic card. If the image appears to be unstable or flickers, use this function to correct it.
- Frequency: Change the display data frequency to match the frequency of your computer’s graphic card. Use this function only if the image appears to flicker vertically.
- H. Position: Adjust the image left or right within the projection area.
- V. Position: Adjust the image up or down within the projection area.

Reset

Return the display parameters on IMAGE menu to the factory default settings.

DISPLAY

Format

Use this function to choose your desired aspect ratio.

For SVGA/XGA:

Source	480i/p	576i/p	1080i/p	720p	PC
4:3	1024x768 center				
16:9	1024x576 center				
Native	Displays the original image without any scaling.				
Auto (Default)	If source is 4:3, auto resize to 1024 x 768 If source is 16:9 auto resize to 1024 x 576 If source is 15:9 auto resize to 1024 x 614 If source is 16:10 auto resize to 1024 x 640				

For WXGA:

16:9 or 16:10 depend on “Screen Type” setting.

16:10 Screen

16 : 10 screen	480i/p	576i/p	1080i/p	720p	PC
4:3	1066x800 center				
16:10	1280x800 center				
LBX	1280x960 center, then get the central 1280x800 image to display.				
Native	1:1 mapping centered		1:1 mapping display 1280 x 800	1280x720 Centered	1:1 mapping centred

Auto (Default)	Input source will be fit into 1280x800 display area and be kept its original aspect ratio. If source is 4:3, auto resize to 1066 x 800 If source is 16:9 auto resize to 1280 x 720 If source is 15:9 auto resize to 1280 x 768 If source is 16:10 auto resize to 1280 x 800

16:9 Screen

16 : 9 screen	480i/p	576i/p	1080i/p	720p	PC
4:3	960x720 center				
16:9	1280x720 center				
LBX	1280x960 center, then get the central 1280x720 image to display.				
Native	1:1 mapping centered		1:1 mapping display 1280 x 720	1280x720 Centered	1:1 mapping centred
Auto (Default)	If this format is select, Screen type will auto become 16:9 (1280 x 720) If source is 4:3, auto resize to 960 x 720 If source is 16:9 auto resize to 1280 x 720 If source is 15:9 auto resize to 1200 x 720 If source is 16:10 auto resize to 1152 x 720				

Edge Mask

Edge Mask function removes the noise in a video image. Overscan the image to remove video encoding noise on the edge of video source.

Note

- *Each I/O has different setting of "Edge Mask".*
- *"Edge Mask" and "Zoom" can't work at same time.*

Zoom

Zoom in and out the images.

Image Shift

Shift the projected image position horizontally and vertically.

V Keystone

Adjust image distortion vertically. If the image looks trapezoidal, this option can help make the image rectangular.

Note

- *Keystone adjustment might affect the complete presentation of the OSD menu.*

3D

3D Mode

- Off: Select “Off” to turn off 3D mode.
- DLP Link: Select “DLP Link” to use optimized settings for DLP Link 3D glasses.

3D--->2D

- 3D: Select 3D format.
- L: Select left eye data.
- R: Select right eye data.

3D Format

- SBS: Use this mode for “Side-by-side” format 3D content.
- Top and Bottom: Use this mode for “Top and Bottom” format 3D content.
- Frame Sequential: Use this mode for “Frame Sequential” format 3D content.

3D Sync. Invert

- Press the “On” to invert left and right frame contents.
- Press the “Off” for default frame contents.

SETUP

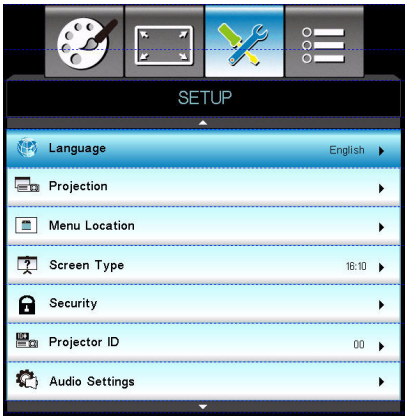

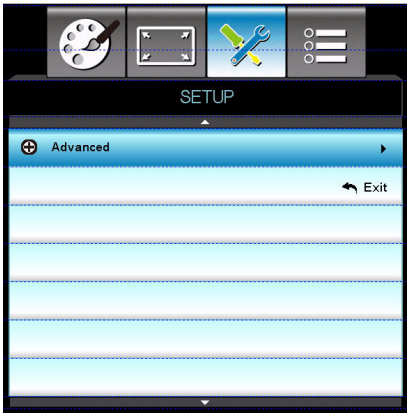

Language

Select the language used by the on-screen menu. Press ◄/►/"Enter" key to enter the sub menu and then use the ▲/▼/◄/► key to select your preferred language. Press "Enter" to finalize the selection.

Projection

Adjust the picture to match the orientation of the projector: upright or upside-down, in front of or behind the screen. Invert or reverse the image accordingly.

Menu Location

Choose the menu location on the display screen.

Screen Type (for WXGA only)

Choose the screen type from16:10 or 16:9.

Security

Security

- On: Choose "On" to use security verification when the turning on the projector.
- Off: Choose "Off" to be able to switch on the projector without password verification.

Security Timer

Use this function to set the how long (Month/Day/Hour) the projector can be used. Once this time has elapsed you will be requested to enter your password again.

Change Password

- First time:

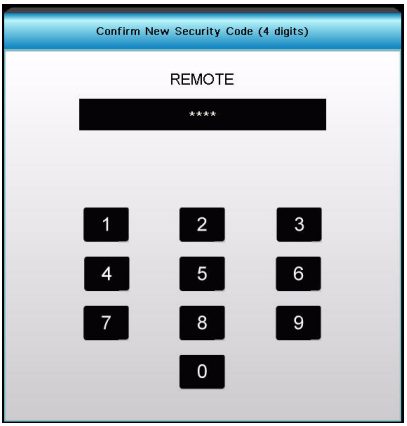

1. Press “Enter” to set the password.
2. The password has to be 4 digits.
3. Use number button on the remote to enter your new password and then press “Enter” key to confirm your password.

- Change Password:

1. Press “Enter” to input old password.
2. Use number button to enter current password and then press “Enter” to confirm.
3. Enter new password (4 digits in length) using the number buttons on the remote, then press “Enter” to confirm.
4. Enter new password again and press “Enter” to confirm.
   - If the incorrect password is entered 3 times, the projector will automatically shut down.
   - If you have forgotten your password, please contact your local office for support.

Note

- *Password default value is “1234” (first time).*

Projector ID

ID definition can be set up by menu (range 0~99), and allow user control an individual projector by RS232.

Audio Settings (Type2/3/4)

Mute

Cut off the sound temporarily.

Volume

Adjust the volume level.

Advanced

Logo

Use this function to set the desired startup screen. If changes are made they will take effect the next time the projector is powered on.

- Default: The default startup screen.
- Neutral: Neutral startup screen.

Closed Captioning

Use this function to set the desired startup screen. If changes are made they will take effect the next time the projector is powered on.

- Off: select “Off” to turn off the closed captioning feature.
- CC1:CC1 language: American English.
- CC2:CC2 language (depending on the TV channel of the user):Spanish, French, Portuguese, German, Danish.

OPTIONS

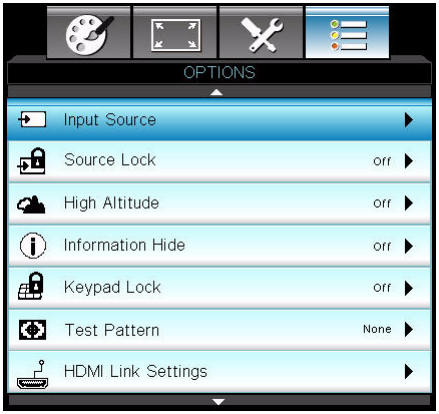

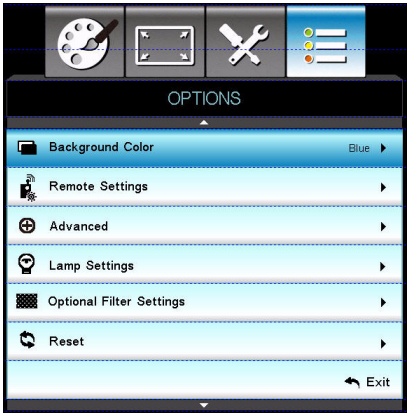

Input Source

Use this option to enable / disable input sources. Press ◀ / ▶ /"Enter" key to enter the sub menu and select which sources you require. Press "Enter" to finalize the selection. The projector will not search for inputs that are not selected.

Source Lock

- On: The projector will only search current input connection.
- Off: The projector will search for other signals if the current input signal is lost.

High Altitude

When "On" is selected, the fans will spin faster. This feature is useful in high altitude areas where the air is thin.

Note

- *With dust filter installed, High Altitude mode must be turned on manually. Dust filter is Optional and may not be required in some regions.*

Information Hide

- On: Choose "On" to hide the info message.
- Off: Choose "Off" to show the "searching" message.

Keypad Lock

When the keypad lock function is “On”, the control panel will be locked however, the projector can be operated by the remote control. By selecting “Off”, you will be able to reuse the control panel.

Note

- *To turn off the keypad lock, press and hold “Enter” key on top of the projector for 5 seconds.*

Test Pattern

Display a test pattern. There are Grid, White pattern and None.

HDMI Link Settings (Type3/4)

Using HDMI Link

- When you connect HDMI CEC-compatible devices to the projector with HDMI cables, you can control them on same Power On or Power Off status using the HDMI Link control feature on the projector's OSD.
- This lets one device or multiple devices in a group Power On or power Off via HDMI Link Feature.
- In a typical configuration, your DVD player may be connected to the projector through an amplifier or home theater system.

Note

- *When HDMI Link is set to Off, the standby mode is < 0.5W.*

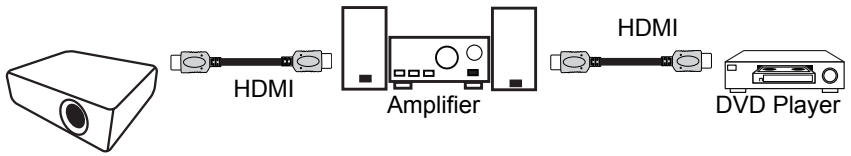

Note

- *Some HDMI Link functions may not operate, depending on the connected product's design and compliance with the HDMI CEC standard.*

HDMI Link

Enable/Disable the HDMI Link function. The inclusive TV, Power on Link, and Power off Link options will only available if the setting is set to On.

Inclusive of TV

If the setting is set to "Yes", both TV and projector will be automatically turned off at the same time. To prevent both devices to be turned off at the same time, set the setting to "No".

Power On Link

CEC power on command

- Mutual: Both projector and CEC device will be turned on simultaneously.
- PJ -> Device: The CEC device will be turned on only after the projector is switched on.
- Device -> PJ: The projector will be switched on only after the CEC device is turned on.

Power Off Link

If the setting is set to "On", both HDMI Link and projector will be automatically turned off at the same time. Set to "Off", both HDMI Link and projector will be not automatically turned off at the same time.

Background Color

Use this feature to display a “Black”, “Red”, “Blue”, “Green” or “White”, screen when no signal is available.

Remote Settings

Allow user to define a short cut key on the remote control, and the function item is selected in OSD menu.

Advanced

Direct Power On

Choose “On” to activate Direct Power mode. The projector will automatically power on when AC power is supplied, without pressing the “ ⏻ ” key on the projector or on the remote control.

Auto Power Off (min)

Sets the countdown timer interval. The countdown timer will start, when there is no signal being sent to the projector. The projector will automatically power off when the countdown has finished (in minutes).

Sleep Timer (min)

Sets the countdown timer interval. The countdown timer will start, with or without a signal being sent to the projector. The projector will automatically power off when the countdown has finished (in minutes).

Quick Resume

If the projector is accidentally turned off, this feature allows the projector to be instantly powered on again within 100 seconds of power down.

Power Mode (Standby)

Set whether the Device -> PJ function works when the projector is in standby (powered off but connected to AC power).

- Eco: The Device -> PJ function will not work when the projector is in standby.
- Active: The Device -> PJ function will work when the projector is in standby.

Note

- *When HDMI Link is set to Off, the standby mode is < 0.5W.*

Lamp Settings

Lamp Hours

Display the projection time.

Lamp Reminder

Choose this function to show or to hide the warning message when the changing lamp message is displayed.

Brightness Mode

- Bright: Choose “Bright” to increase the brightness.
- Eco.: Choose "Eco." to dim the projector lamp which will lower power consumption and extend the lamp life.
- Dynamic: Choose "Dynamic" to dim the lamp power which will be based on brightness level of the content and adjust lamp power consumption between 100% and 30% dynamically. The lamp life will be extended.
- Eco+: Choose "Eco+." to dim the lamp power which will be based on brightness level of the content and adjust lamp power consumption between 80% and 30% dynamically. The lamp life will be extended.

Lamp SPA Mode

Choose "On" to turn on the Lamp SPA Mode. Choose "Off" to turn off the Lamp SPA Mode.

Lamp Reset

Reset the lamp hour counter after replacing the lamp.

Optional Filter Settings

Optional Filter Installed

Choose “Yes” if an optional dust filter is installed.

Filter Usage Hours

Display the dust filter’s elapsed operating time (in hours).

Filter Reminder

Sets a filter reminder if timer is up.

Filter Reset

Reset the dust filter hour counter after replacing the dust filter.

Reset

Choose “Yes” to return the display parameters on all menus to the factory default settings.

Appendix

Installing the Dust Filter (Optional accessory)

Be sure to follow the steps to install the dust filter.

1. Align the filter with the side of the projector.
2. Stick the filter to the ventilation holes until it hooked..

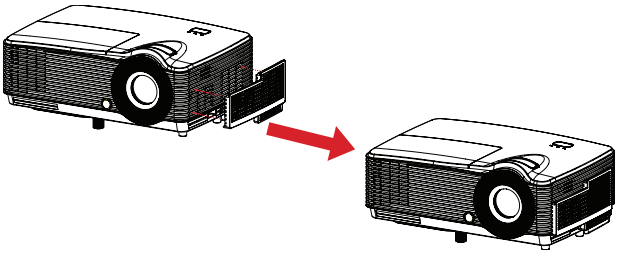

3. **Turn on the projector, then press “Menu”, go to OPTIONS > Optional Filter > Optional Filter Installed and select “Yes”.**
4. Clean the dust filter periodically.

☞ **The dust filter should be used in dusty environments only. Filters must be cleaned/replaced periodically i.e after every 500 hrs or 3 months, or sooner depending upon the air environment. Clogged filter can restrict air flow causing the projector to heat excessively leading to pre-mature lamp and/or projector failure.**

5. To remove the dust filter, take it apart from the projector.
6. Turn on the projector, then press “Menu”, go to OPTIONS > Optional Filter > Optional Filter Installed and select “No” when you pull out the dust filter and would not install it again.

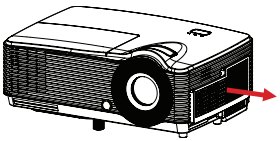

Replacing the Lamp

Over time, the brightness on the lamp is expected to decrease gradually. It is recommended to replace the lamp when the warning message pops up on the projected image. If somehow the lamp has shattered, it is recommended to get the lamp replaced by a qualified service personal.

Note

- *The lamp is extremely hot right after turning off the projector. If you touch the lamp, you may scald your finger. When you replace the lamp, wait for at least 45 minutes for the lamp to cool down.*
- *Do not touch the lamp glass at any time. The lamp may explode due to improper handling, including the touching of the lamp glass.*
- *Lamp lifetime may differ from lamp to lamp and according to the environment of use. There is no guarantee of the same lifetime for each lamp. Some lamps may fail or terminate their lifetime in a shorter period of time than other similar lamps.*
- *A lamp may explode as a result of vibration, shock or degradation as a result of hours of use as its lifetime draws to an end. Risk of explosion may differ according to the environment or conditions in which the projector and lamp are being used.*
- *Wear protective gloves and eyeglasses when fixing or detaching the lamp.*
- *Faster on-off-cycles will damage the lamp and reduce lamp life. Wait at least for 5 minutes to turn off the projector after powering on.*
- *Do not operate the lamp in proximity to paper, cloth, or other combustible material nor cover it with such materials.*
- *Do not operate the lamp in an atmosphere containing an inflammable substance, such as thinner.*
- *Thoroughly ventilate the area or the room when operating the lamp in an oxygen atmosphere (in the air). If ozone is inhaled, it could cause headaches, nausea, dizziness, and other symptoms.*
- *The inorganic mercury is involved in the lamp. If the lamp bursts, the mercury inside the lamp will be exposed. Leave the area immediately if the lamp shatters while being operated and ventilate the area for at least 30 minutes in order to avoid the inhalation of mercury fumes. Otherwise it could be harmful to user's health.*

1. Turn off the projector.
2. Unplug the power cord.
3. Remove the screw in the side of the lamp cover. 1
4. Lift the cover. 2
5. Loosen the screws from the lamp module. 3
6. Raise the handle and pull out the lamp module slowly and carefully. 4
7. Insert the new lamp module into the projector and tighten the screws.
8. Replace the lamp cover and tighten the screw.
9. Turn on the projector. If the lamp does not turn on after the warm-up period, try reinstalling the lamp.
10. Reset the lamp hour. Refer to the "**OPTIONS > Lamp Settings**" menu.

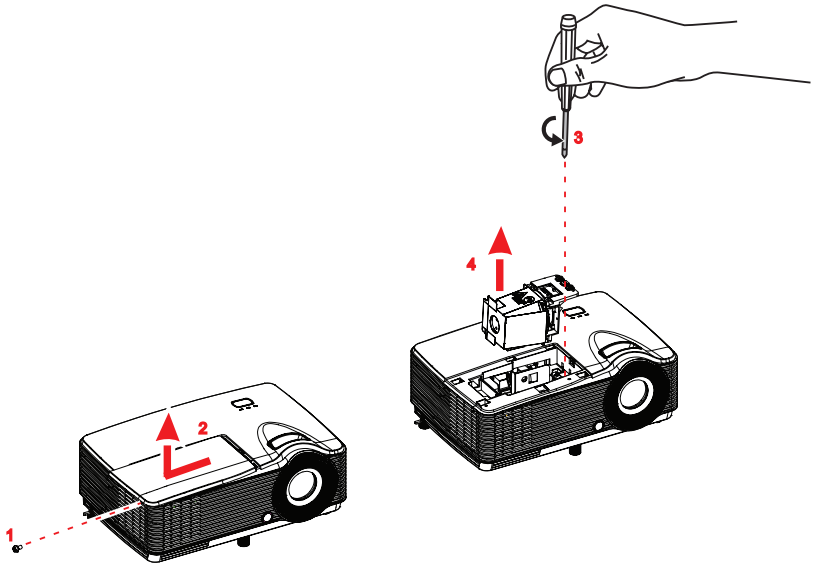

Note

- *Dispose the used lamp according to local regulations.*
- *Ensure that screws are tightened properly. Screws not tightened fully may result in injury or accidents.*
- *Since the lamp is made of glass, do not drop the unit and do not scratch the glass.*
- *Do not reuse the old lamp. This could cause the lamp to explode.*
- *Be sure to turn off the projector and unplug the AC power cord before replacing the lamp.*
- *Do not use the projector with the lamp cover removed.*

Ceiling mount installation

1. To prevent damage to your projector, please use the Optoma ceiling mount.
2. If you wish to use a third party ceiling mount kit, please ensure the screws used to attach a mount to the projector meet the following specifications:

- Screw type: M4*4
- Maximum screw length: 8mm
- Minimum screw length: 6mm

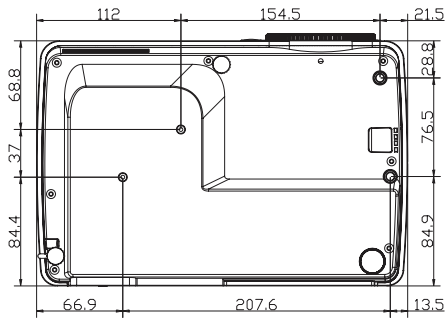

Unit: mm

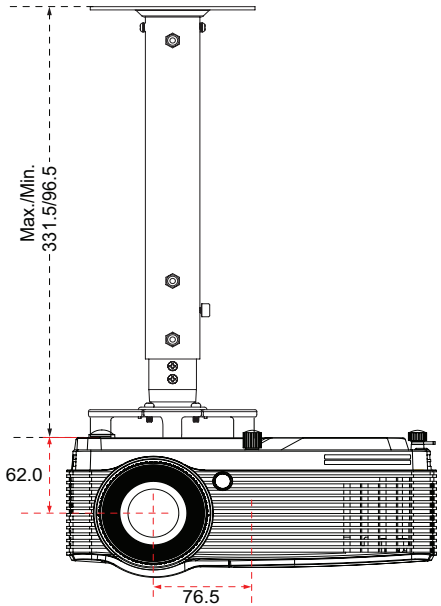

Note

- *Please note that damage resulting from incorrect installation will void the warranty.*

Warning

1.If you buy a ceiling mount from another company, please be sure to use the correct screw size. Screw length will vary depending on the thickness of the mounting plate.
2.Be sure to keep at least 10 cm gap between the ceiling and the bottom of the projector.
3.Avoid installing the projector near a heat source.

Compatibility Modes

Computer Compatibility

Signal	Resolution	Refresh Rate(Hz)	Notes for Mac
VGA	640 X 480	60/67/72/85	Mac 60/72/85
SVGA	800 X 600	60(*2)/72/85/120(*2)	Mac 60/72/85
XGA	1024 X768	60(*2)/70/75/85/ 120(*2)	Mac 60/70/75/85
HDTV(720P)	1280 X 720	50/60(*2)/120(*2)	Mac 60
WXGA	1280 X768	60/75/85	Mac 60/75/85
	1280 X800	60	Mac 60
	1366 x 768	60	Mac 60
SXGA	1280 X1024	60	Mac 60/75
SXGA+	1400 X1050	60	
UXGA	1600 X 1200	60	
HDTV(1080p)	1920 X1080	60	Mac 60
WUXGA	1920 X1200(*1)	60	Mac 60

*(*1)1920 x 1200 @60hz only support reduced blanking*
*(*2) 3D timing for True 3D projector*

Input Signal for HDMI

Signal	Resolution	Refresh Rate(Hz)	Notes for Mac
VGA	640 X 480	60	Mac 60/72/85
SVGA	800 X 600	60(*2)/72/85/120(*2)	Mac 60/72/85
XGA	1024 X 768	60(*2)/70/75/85/ 120(*2)	Mac 60/70/75/85
SDTV(480I)	640 X 480	60	
SDTV(480P)	640 X 480	60	
SDTV(576I)	720 X 576	50	
SDTV(576P)	720 X 576	50	
WSVGA(1024X600)	1024 X 600	60	
HDTV(720p)	1280 X 720	50(*2)/60/120(*2)	Mac 60
WXGA	1280 X768	60/75/85	Mac 75
	1280 X800	60	Mac 60
	1366 x 768	60	Mac 60
WXGA+	1440 x 900	60	Mac 60
SXGA	1280 X1024	60/75/85	Mac 60/75
SXGA+	1400 X1050	60	
UXGA	1600 X 1200	60	
HDTV(1080I)	1920 X1080	50/60	
HDTV(1080p)	1920 X1080	24/30/50/60	Mac 60
WUXGA	1920 X1200(*1)	60	Mac 60

*(*1)1920 x 1200 @60hz only support reduced blanking*
*(*2)3D timing for True 3D projector*

True 3D Video Compatibility table

Input Resolutions	HDMI 1.4a 3D Input	Input timing		
		1280 X 720P @ 50Hz	Top - and - Bottom	
		1280 X 720P @ 60Hz	Top - and - Bottom	
		1280 X 720P @ 50Hz	Frame packing	
		1280 X 720P @ 60Hz	Frame packing	
		1920 X 1080i @50 Hz	Side- by-Side (Half)	
		1920 X 1080i @60 Hz	Side- by-Side (Half)	
		1920 X 1080P @24 Hz	Top - and - Bottom	
		1920 X 1080P @24 Hz	Frame packing	
	HDMI 1.3	1920 x 1080i @ 50Hz 1920 x1080i @ 60Hz 1280 x 720P @ 50Hz 1280 x 720P @60Hz	Side-by-Side(Half)	SBS mode is on
		1920 x 1080i @ 50Hz 1920 x1080i @ 60Hz 1280 x 720P @ 50Hz 1280 x 720P @60Hz	Top-and-Bottom	TAB mode is on
		480i	HQFS	3D format is Frame sequential

- *If 3D input is 1080p@24hz, the DMD should replay with integral multiple with 3D mode*
- *1080i@25hz and 720p@50hz will run in 100hz; other 3D timing will run in 120hz*

Video Compatibility

NTSC	NTSC M/J, 3.58MHz, 4.43MHz
PAL	PAL B/D/G/H/I/M/N, 4.43MHz
SECAM	SECAM B/D/G/K/K1/L, 4.25/4.4 MHz
Component	480i/p, 576i/p, 720p(50/60Hz), 1080i(50/60Hz) 1080P(24/50/60Hz)
SDTV	480i/p, 576i/p
HDTV	720p(50/60Hz), 1080i(50/60Hz), 1080P(50/60Hz)

IR Code

Customer code: 32CD	
Key code	Printing-key definition
81	Power on/off
3E	Switch
8A	
8B	Freeze
92	Mute
CB	L
CC	R
C6	Up arrow
C8	Left arrow
C9	Right arrow
C7	Down arrow

C5	Enter
CA	Enter
95	Mode
C2	Page-
C1	Page+
85	Keystone+
84	Keystone-
8C	Volume +
8F	Volume -
98	/1
88	Menu/2
93	3D/3
86	HDMI1/4
D0	VGA/5
D1	Video/6
D2	User 1/7
D3	User 2/8
D4	User 3/9
C3	Source
96	/0
C4	Re-Sync

The IR codes below are for user-defined remote only.

79	Power off (single push)
82	Power off
80	Power on
9A	VGA2
9D	Component

RS232 Commands and Protocol Function List

RS232 Pin Assignments

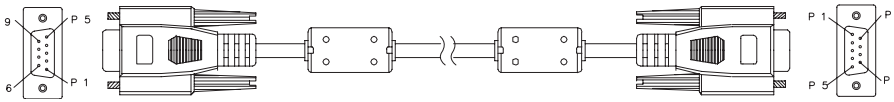

D-Sub 9 pin
(from the projector side)

1	1 CD
2	RXD
3	TXD
4	DTR
5	GND
6	DSR
7	RTS
8	CTS
9	RI

Wire List
(from the cable side)

C1	COLOR	C2
1	Black	1
2	Brown	3
3	Red	2
4	Orange	6
5	Yellow	5
6	Green	4
7	Blue	8
8	Purple	7
9	White	9
SHELL	DW	SHELL

RS232 Protocol Function List

Baud Rate : 9600
Data Bits: 8
Parity: None
Stop Bits: 1
Flow Control : None
UART16550 FIFO: Disable
Projector Return (Pass): P
Projector Return (Fail): F

XX=01-99, projector's ID,
XX=00 is for all projectors

Note

- *There is a <CR> after all ASCII commands.*
- *0D is the HEX code for <CR> in ASCII code.*

SEND to projector

232 ASCII Code	HEX Code Description	Function	
~XX00 1	7E 30 30 30 30 20 31 0D	Power ON	
~XX00 0	7E 30 30 30 30 20 30 0D	Power OFF	(0/2 for backward compatible)
~XX00 1 ~nnnn	7E 30 30 30 30 20 31 20 a 0D	Power ON with Password	~nnnn = ~0000 (a=7E 30 30 30 30) ~9999 (a=7E 39 39 39 39)
~XX01 1	7E 30 30 30 31 20 31 0D	Resync	
~XX02 1	7E 30 30 30 32 20 31 0D	AV Mute	On
~XX02 0	7E 30 30 30 32 20 30 0D		Off (0/2 for backward compatible)
~XX03 1	7E 30 30 30 33 20 31 0D	Mute	On
~XX03 0	7E 30 30 30 33 20 30 0D		Off (0/2 for backward compatible)
~XX04 1	7E 30 30 30 34 20 31 0D	Freeze	
~XX04 0	7E 30 30 30 34 20 30 0D	Unfreeze	(0/2 for backward compatible)
~XX05 1	7E 30 30 30 35 20 31 0D	Zoom Plus	
~XX06 1	7E 30 30 30 36 20 31 0D	Zoom Minus	
~XX12 1	7E 30 30 31 32 20 31 0D	Direct Source Commands	HDMI
~XX12 5	7E 30 30 31 32 20 35 0D		VGA
~XX12 8	7E 30 30 31 32 20 38 0D		VGA Component
~XX12 10	7E 30 30 31 32 20 31 30 0D		Video
~XX20 1	7E 30 30 32 30 20 31 0D	Display Mode	Presentation
~XX20 2	7E 30 30 32 30 20 32 0D		Bright
~XX20 3	7E 30 30 32 30 20 33 0D		Movie
~XX20 4	7E 30 30 32 30 20 34 0D		sRGB
~XX20 5	7E 30 30 32 30 20 35 0D		User
~XX20 7	7E 30 30 32 30 20 37 0D		Blackboard
~XX20 9	7E 30 30 32 30 20 39 0D		3D
~XX20 10	7E 30 30 32 30 20 31 30 0D		Game
~XX20 14	7E 30 30 32 30 20 31 34 0D		ISF Day
~XX20 15	7E 30 30 32 30 20 31 35 0D		ISF Night
~XX21 n	7E 30 30 32 31 20 a 0D	Brightness	n = -50 (a=2D 35 30) ~ 50 (a=35 30)
~XX22 n	7E 30 30 32 32 20 a 0D	Contrast	n = -50 (a=2D 35 30) ~ 50 (a=35 30)
~XX23 n	7E 30 30 32 33 20 a 0D	Sharpness	n = 1 (a=31) ~ 15 (a=31 35)
~XX24 n	7E 30 30 32 34 20 a 0D	Color Settings/White	Red n = -50 (a=2D 35 30) ~ 50 (a=35 30)
~XX25 n	7E 30 30 32 35 20 a 0D		Green n = -50 (a=2D 35 30) ~ 50 (a=35 30)
~XX26 n	7E 30 30 32 36 20 a 0D		Blue n = -50 (a=2D 35 30) ~ 50 (a=35 30)
~XX33 1	7E 30 30 33 33 20 31 0D		Reset
~XX34 n	7E 30 30 33 34 20 a 0D	BrilliantColor™	n = 1 (a=30) ~ 10 (a=31 30)
~XX35 1	7E 30 30 33 35 20 31 0D	Gamma	Film
~XX35 2	7E 30 30 33 35 20 32 0D		Video
~XX35 3	7E 30 30 33 35 20 33 0D		Graphics
~XX35 4	7E 30 30 33 35 20 34 0D		2.2
~XX35 5	7E 30 30 33 35 20 35 0D		1.8
~XX35 6	7E 30 30 33 35 20 36 0D		2.0
~XX35 7	7E 30 30 33 35 20 37 0D		2.6
~XX36 4	7E 30 30 33 36 20 34 0D		Warm(D55)
~XX36 1	7E 30 30 33 36 20 31 0D	Color Temp.	Standard(D65)
~XX36 2	7E 30 30 33 36 20 32 0D		Cool(D75)
~XX36 3	7E 30 30 33 36 20 33 0D		Cold(D83)
~XX37 1	7E 30 30 33 37 20 31 0D	Color Space	Auto
~XX37 2	7E 30 30 33 37 20 32 0D		RGB\ RGB(0-255)
~XX37 3	7E 30 30 33 37 20 33 0D		YUV
~XX37 4	7E 30 30 33 37 20 34 0D		RGB(16 - 235)
~XX73 n	7E 30 30 37 33 20 a 0D	Signal	Frequency n = -5 (a=2D 35) ~ 5 (a=35) By signal
~XX91 n	7E 30 30 39 31 20 a 0D		Automatic n = 0 disable; n = 1 enable
~XX74 n	7E 30 30 37 34 20 a 0D		Phase n = 0 (a=30) ~ 31 (a=33 31) By signal
~XX75 n	7E 30 30 37 35 20 a 0D		H. Position n = -5 (a=2D 35) ~ 5 (a=35) By timing
~XX76 n	7E 30 30 37 36 20 a 0D		V. Position n = -5 (a=2D 35) ~ 5 (a=35) By timing
~XX45 n	7E 30 30 34 34 20 a 0D	Color (Saturation)	n = -50 (a=2D 35 30) ~ 50 (a=35 30)
~XX44 n	7E 30 30 34 35 20 a 0D	Tint	n = -50 (a=2D 35 30) ~ 50 (a=35 30))
~XX60 1	7E 30 30 36 30 20 31 0D	Format	4:3
~XX60 2	7E 30 30 36 30 20 32 0D		16:9
~XX60 3	7E 30 30 36 30 20 33 0D		16:10
~XX60 5	7E 30 30 36 30 20 35 0D		LBX
~XX60 6	7E 30 30 36 30 20 36 0D		Native
~XX60 7	7E 30 30 36 30 20 37 0D		Auto

~XX61 n	7E 30 30 36 31 20 a 0D	Edge mask	n = 0 (a=30) ~ 10 (a=31 30)
~XX62 n	7E 30 30 36 32 20 a 0D	Zoom	n = -5 (a=2D 35) ~ 25 (a=32 35)
~XX63 n	7E 30 30 36 33 20 a 0D	H Image Shift	n = -100 (a=2D 35 30) ~ 100 (a=35 30)
~XX64 n	7E 30 30 36 34 20 a 0D	V Image Shift	n = -100 (a=2D 35 30) ~ 100 (a=35 30)
~XX66 n	7E 30 30 36 36 20 a 0D	V Keystone	n = -40 (a=2D 34 30) ~ 40 (a=34 30)
~XX230 0	7E 30 30 32 33 30 20 30 0D	3D Mode	OFF
~XX230 1	7E 30 30 32 33 30 20 31 0D	3D Mode	DLP-Link
~XX400 0	7E 30 30 34 30 30 20 30 0D	3D→2D	3D
~XX400 1	7E 30 30 34 30 30 20 31 0D		L
~XX400 2	7E 30 30 34 30 30 20 32 0D		R
~XX405 0	7E 30 30 34 30 35 20 30 0D	3D Format	Auto
~XX405 1	7E 30 30 34 30 35 20 31 0D		SBS
~XX405 2	7E 30 30 34 30 35 20 32 0D		Top and Bottom
~XX405 3	7E 30 30 34 30 35 20 33 0D		Frame sequential
~XX231 0	7E 30 30 32 33 31 20 30 0D	3D Sync Invert	On
~XX231 1	7E 30 30 32 33 31 20 31 0D	3D Sync Invert	Off

~XX70 1	7E 30 30 37 30 20 31 0D	Language	English
~XX70 2	7E 30 30 37 30 20 32 0D		German
~XX70 3	7E 30 30 37 30 20 33 0D		French
~XX70 4	7E 30 30 37 30 20 34 0D		Italian
~XX70 5	7E 30 30 37 30 20 35 0D		Spanish
~XX70 6	7E 30 30 37 30 20 36 0D		Portuguese
~XX70 7	7E 30 30 37 30 20 37 0D		Polish
~XX70 8	7E 30 30 37 30 20 38 0D		Dutch
~XX70 9	7E 30 30 37 30 20 39 0D		Swedish
~XX70 10	7E 30 30 37 30 20 31 30 0D		Norwegian/Danish
~XX70 11	7E 30 30 37 30 20 31 31 0D		Finnish
~XX70 12	7E 30 30 37 30 20 31 32 0D		Greek
~XX70 13	7E 30 30 37 30 20 31 33 0D		Traditional Chinese
~XX70 14	7E 30 30 37 30 20 31 34 0D		Simplified Chinese
~XX70 15	7E 30 30 37 30 20 31 35 0D		Japanese
~XX70 16	7E 30 30 37 30 20 31 36 0D		Korean
~XX70 17	7E 30 30 37 30 20 31 37 0D		Russian
~XX70 18	7E 30 30 37 30 20 31 38 0D		Hungarian
~XX70 19	7E 30 30 37 30 20 31 39 0D		Czechoslovak
~XX70 20	7E 30 30 37 30 20 32 30 0D		Arabic
~XX70 21	7E 30 30 37 30 20 32 31 0D		Thai
~XX70 22	7E 30 30 37 30 20 32 32 0D		Turkish
~XX70 23	7E 30 30 37 30 20 32 33 0D		Farsi
~XX70 25	7E 30 30 37 30 20 32 33 0D		Vietnamese
~XX70 26	7E 30 30 37 30 20 32 33 0D		Indonesian
~XX70 27	7E 30 30 37 30 20 32 33 0D		Romanian

~XX71 1	7E 30 30 37 31 20 31 0D	Projection	Front-Desktop
~XX71 2	7E 30 30 37 31 20 32 0D		Rear-Desktop
~XX71 3	7E 30 30 37 31 20 33 0D		Front-Ceiling
~XX71 4	7E 30 30 37 31 20 34 0D		Rear-Ceiling

~XX72 1	7E 30 30 37 32 20 31 0D	Menu Location	Top Left
~XX72 2	7E 30 30 37 32 20 32 0D		Top Right
~XX72 3	7E 30 30 37 32 20 33 0D		Centre
~XX72 4	7E 30 30 37 32 20 34 0D		Bottom Left
~XX72 5	7E 30 30 37 32 20 35 0D		Bottom Right
~XX90 1	7E 30 30 39 31 20 31 0D	Screen Type	16:10
~XX90 0	7E 30 30 39 31 20 30 0D		16:9

~XX77 n	7E 30 30 37 37 20 aabbcc 0D	Security Timer	Month/Day/Hour n = mm/dd/hh mm= 00 (aa=30 30) ~ 12 (aa=31 32) dd = 00 (bb=30 30) ~ 30 (bb=33 30) hh= 00 (cc=30 30) ~ 24 (cc=32 34)
~XX78 1	7E 30 30 37 38 20 31 0D	Security Settings	Enable
~XX78 0 ~nnnn	7E 30 30 37 38 20 32 20 a 0D		Disable(0/2 for backward compatible) ~nnnn = ~0000 (a=7E 30 30 30 30) ~9999 (a=7E 39 39 39 39)

~XX79 n	7E 30 30 37 39 20 a 0D	Projector ID	n = 00 (a=30 30) ~ 99 (a=39 39)

~XX310 0	7E 30 33 31 30 20 30 0D	Internal Speaker	Off
~XX310 1	7E 30 33 31 30 20 31 0D		On
~XX80 1	7E 30 30 38 30 20 31 0D	Mute	On
~XX80 0	7E 30 30 38 30 20 30 0D		Off (0/2 for backward compatible)
~XX81 n	7E 30 30 38 31 20 a 0D	Volume	n = 0 (a=30) ~ 10 (a=31 30)

~XX82 1	7E 30 30 38 32 20 31 0D	Logo	Default
~XX82 3	7E 30 30 38 32 20 33 0D		Neutral
~XX88 0	7E 30 30 38 38 20 30 0D	Closed Captioning	Off
~XX88 1	7E 30 30 38 38 20 31 0D		cc1
~XX88 2	7E 30 30 38 38 20 32 0D		cc2

~XX100 1	7E 30 30 31 30 30 20 31 0D	Source Lock	On
~XX100 0	7E 30 30 31 30 30 20 30 0D		Off (0/2 for backward compatible)
~XX101 1	7E 30 30 31 30 31 20 31 0D	High Altitude	On
~XX101 0	7E 30 30 31 30 31 20 30 0D		Off (0/2 for backward compatible)
~XX102 1	7E 30 30 31 30 32 20 31 0D	Information Hide	On
~XX102 0	7E 30 30 31 30 32 20 30 0D		Off (0/2 for backward compatible)
~XX103 1	7E 30 30 31 30 33 20 31 0D	Keypad Lock	On
~XX103 0	7E 30 30 31 30 33 20 30 0D		Off (0/2 for backward compatible)
~XX195 0	7E 30 30 31 39 35 20 30 0D	Test Pattern	None
~XX195 1	7E 30 30 31 39 35 20 31 0D		Grid
~XX195 2	7E 30 30 31 39 35 20 32 0D		White Pattern

~XX104 1	7E 30 30 31 30 34 20 31 0D	Background Color	Blue
~XX104 2	7E 30 30 31 30 34 20 32 0D		Black
~XX104 3	7E 30 30 31 30 34 20 33 0D		Red
~XX104 4	7E 30 30 31 30 34 20 34 0D		Green
~XX104 5	7E 30 30 31 30 34 20 35 0D		White

~XX105 1	7E 30 30 31 30 35 20 31 0D	Direct Power On	On
~XX105 0	7E 30 30 31 30 35 20 30 0D		Off (0/2 for backward compatible)
~XX106 n	7E 30 30 31 30 36 20 a 0D	Auto Power Off (min)	n = 0 (a=30) ~ 180 (a=31 38 30) (5 minutes for each step).
~XX107 n	7E 30 30 31 30 37 20 a 0D	Sleep Timer (min)	n = 0 (a=30) ~ 990 (a=39 39 39) (30 minutes for each step).
~XX115 1	7E 30 30 31 31 35 20 31 0D	Quick Resume	On
~XX115 0	7E 30 30 31 31 35 20 30 0D		Off (0/2 for backward compatible)
~XX114 1	7E 30 30 31 31 34 20 31 0D	Power Mode(Standby)	Eco.(<=0.5W)
~XX114 0	7E 30 30 31 31 34 20 30 0D		Active (0/2 for backward compatible)

~XX109 1	7E 30 30 31 30 39 20 31 0D	Lamp Reminder	On
~XX109 0	7E 30 30 31 30 39 20 30 0D		Off (0/2 for backward compatible)
~XX110 1	7E 30 30 31 31 30 20 31 0D	Brightness Mode	Bright
~XX110 2	7E 30 30 31 31 30 20 32 0D		Eco
~XX110 3	7E 30 30 31 31 30 20 33 0D		Eco+
~XX110 4	7E 30 30 31 31 30 20 34 0D		Dynamic
~XX111 1	7E 30 30 31 31 31 20 31 0D	Lamp Reset	Yes
~XX111 0	7E 30 30 31 31 31 20 30 0D		No (0/2 for backward compatible)

~XX320 1	7E 30 30 33 32 30 20 31 0D	Optional Filter Installed	Yes
~XX320 0	7E 30 30 33 32 30 20 30 0D		No (0/2 for backward compatible)
~XX322 0	7E 30 30 33 32 32 20 30 0D	Filter Reminder	Off
~XX322 1	7E 30 30 33 32 32 20 31 0D		300 hr
~XX322 2	7E 30 30 33 32 32 20 32 0D		500 hr
~XX322 3	7E 30 30 33 32 32 20 33 0D		800 hr
~XX322 4	7E 30 30 33 32 32 20 34 0D		1000 hr
~XX323 1	7E 30 30 33 32 33 20 31 0D	Filter Reset	Yes
~XX323 0	7E 30 30 33 32 33 20 30 0D		No (0/2 for backward compatible)

~XX112 1	7E 30 30 31 31 32 20 31 0D	Reset	Yes

~XX99 1	7E 30 30 39 39 20 31 0D	RS232 Alert Reset	Reset System Alert
~XX210 n	7E 30 30 32 30 30 20 n 0D	Display message on the OSD	n: 1-30 characters

SEND to emulate Remote

~XX140 10	7E 30 30 31 34 30 20 31 30 0D	Up
~XX140 11	7E 30 30 31 34 30 20 31 31 0D	Left
~XX140 12	7E 30 30 31 34 30 20 31 32 0D	Enter (for projection MENU)
~XX140 13	7E 30 30 31 34 30 20 31 33 0D	Right
~XX140 14	7E 30 30 31 34 30 20 31 34 0D	Down
~XX140 15	7E 30 30 31 34 30 20 31 35 0D	Keystone +
~XX140 16	7E 30 30 31 34 30 20 31 36 0D	Keystone –
~XX140 17	7E 30 30 31 34 30 20 31 37 0D	Volume –
~XX140 18	7E 30 30 31 34 30 20 31 38 0D	Volume +
~XX140 19	7E 30 30 31 34 30 20 31 39 0D	Brightness
~XX140 20	7E 30 30 31 34 30 20 32 30 0D	Menu
~XX140 21	7E 30 30 31 34 30 20 32 31 0D	Zoom
~XX140 47	7E 30 30 31 34 30 20 34 37 0D	Source

SEND from projector automatically

232 ASCII Code	HEX Code	Function	Projector Return	Description
when Standby/Warming/Cooling/Out of Range/Lamp fail/Fan Lock/Over Temperature/ Lamp Hours Running Out/Cover Open			INFOn	n : 0/1/2/3/4/6/7/8/9 = Standby/Warming/Cooling/Out of Range/Lamp fail/Fan Lock/Over Temperature/Lamp Hours Running Out/Cover Open/Lamp SPA mode

READ from projector

232 ASCII Code	HEX Code	Function	Projector Return	Description
~XX121 1	7E 30 30 31 32 31 20 31 0D	Input Source Commands	OKn	n: 0/1/2/3/4 = None/VGA/Video/HDMI1/HDMI2/
~XX122 1	7E 30 30 31 32 32 20 31 0D	Sofware Version	OKdddd	dddd: FW version
~XX123 1	7E 30 30 31 32 33 20 31 0D	Display Mode	OKn	n : 0/1/2/3/4/5/6/7/8/9 = None/Cinema/Reference/Vivid/ Bright/Game/3D/User/ISF Day/ISF Night
~XX124 1	7E 30 30 31 32 34 20 31 0D	Power State	OKn	n : 0/1 = Off/On
~XX125 1	7E 30 30 31 32 35 20 31 0D	Brightness	OKn	
~XX126 1	7E 30 30 31 32 36 20 31 0D	Contrast	OKn	
~XX127 1	7E 30 30 31 32 37 20 31 0D	Aspect Ratio	OKn	n: 0/1/2/3/4/5 = 4:3/16:9/16:10 /LBX/Native/AUTO n: 0/1/2/3/4 =4:3/16:9/LBX/Native/AUTO*16:9 or 16:10 depend on Screen Type setting
~XX128 1	7E 30 30 31 32 38 20 31 0D	Color Temperature	OKn	n : 0/1/2/3/ = Standard/Cool/Cold/Warm
~XX129 1	7E 30 30 31 32 39 20 31 0D	Projection Mode	OKn	n : 0/1/2/3 = Front-Desktop/ Rear-Desktop/ Front-Ceiling/ Rear-Ceiling
~XX150 1	7E 30 30 31 35 30 20 31 0D	Information	OKabbbbccdddde	a : 0/1 = Off/On bbbb: LampHour cc: source 00/01/02/03/04 = None/VGA/Video/HDMI1/HDMI2/ dddd: FW version e : Display mode 0/1/2/3/4/5/7/9/ = None/Presentation/Bright/Movie/sRGB/User/Blackboard /3D
~XX151 1	7E 30 30 31 35 31 20 31 0D	Model name	OKn	n:1/2/3/4= DAESSGZ/DAESSGG/DAEXSGZ/VDHDGGG
~XX108 1	7E 30 30 31 30 38 20 31 0D	Lamp Hours	OKbbbb	bbbb: LampHour
~XX108 2	7E 30 30 31 30 38 20 31 0D	Cumulative Lamp H	OKbbbbb	bbbbb: (5 digits) Total Lamp Hours

Troubleshooting

Refer to the symptoms and measures listed below before sending the projector for repairs. If the problem persists, contact your local reseller or service center. Please refer to "LED Indicator Messages" as well.

Start-up

If no lights turn on:

- Be sure that the power cord is securely connected to the projector and the other end is plugged into an outlet with power.
- Press the power button again.
- Unplug the power cord and wait for a short while, then plug it in and press the power button again.

Image

If the searching source is displayed:

- Press **Source** on the remote control to select an active input source.
- Be sure the external source is turned on and connected.
- For a computer connection, ensure your notebook computer's external video port is turned on. Refer to the computer manual.

If the image is out of focus:

- While displaying the on-screen menu, adjust the focus ring. (The image size should not change; if it does, you are adjusting the zoom, not the focus.)
- Check the projection lens to see if it needs cleaning.

If the image is flickering or unstable for a computer connection:

- Press "Menu", go to **IMAGE** > **Advanced** > **Signal** and adjust **Phase** or **Frequency.**

Remote control

If the remote control does not operate:

- Be sure nothing is blocking the remote control receiver on the front of the projector. Use the remote control within the effective range.
- Aim the remote control at the screen or at the front of the projector.
- Move the remote control so it is more directly in front of the projector and not as far to the side.

LED Indicator Messages

Message	Power LED (Red)	Power LED (Green)	Temp LED (Red)	Lamp LED (Red)
Standby State (Input power cord)	Steady light			
Power on (Warming)		Flashing 0.5 sec off 0.5 sec light		
Power on & Lamp lighting		Steady light		
Power off (Cooling)		Flashing 0.5 sec off 0.5 sec light Back to Red steady light when cooling fan turns off		
Quick Resume (100 secs)		Flashing 0.25 sec off 0.25 sec light		
SPA mode (about 3 mins)		Flashing 1 sec off 1 sec light		
Error (Lamp fail)	Flashing			Steady light
Error (Fan fail)	Flashing		Flashing	
Error (Over Temp)	Flashing		Steady light	
Standby State (Burn in mode)		Flashing		
Burnin (Warming)		Flashing		
Burnin (Cooling)		Flashing		

Optoma Global Offices

For service or support please contact your local office.

USA
3178 Laurelview Ct.
Fremont, CA 94538, USA
www.optomausa.com
☎ 888-289-6786
✉ services@optoma.com

Canada
3178 Laurelview Ct.
Fremont, CA 94538, USA
www.optomausa.com
☎ 888-289-6786
✉ services@optoma.com

Europe
42 Caxton Way, The Watford Business Park
Watford, Hertfordshire,
WD18 8QZ, UK
www.optoma.eu
Service Tel : +44 (0)1923 691865
☎ +44 (0) 1923 691 800
🖷 +44 (0) 1923 691 888
✉ service@tsc-europe.com

France
Batiment E
81-83 avenue Edouard Vaillant
92100 Boulogne Billancourt, France
☎ +33 1 41 46 12 20
🖷 +33 1 41 46 94 35
✉ savoptoma@optoma.fr

Spain
C/ Jose Hierro,36 Of. 1C
28522 Rivas VaciaMadrid,
Spain
☎ +34 91 499 06 06
🖷 +34 91 670 08 32

Deutschland
Wiesenstrasse 21 W
D40549 Dusseldorf,
Germany
☎ +49 (0) 211 506 6670
🖷 +49 (0) 211 506 66799
✉ info@optoma.de

Scandinavia
Lerpeveien 25
3040 Drammen
Norway
PO.BOX 9515
3038 Drammen
Norway

☎ +47 32 98 89 90
🖷 +47 32 98 89 99
✉ info@optoma.no

Latin America
3178 Laurelview Ct.
Fremont, CA 94538, USA
www.optoma.com.br

☎ 888-289-6786
www.optoma.com.mx

Korea
WOOMI TECH.CO.,LTD.
4F,Minu Bldg.33-14, Kangnam-Ku,
seoul,135-815, KOREA

☎ +82+2+34430004
🖷 +82+2+34430005

Japan
東京都足立区綾瀬 3-25-18
株式会社オーエス
コンタクトセンター：0120-380-495

✉ info@os-worldwide.com
www.os-worldwide.com

Taiwan
12F., No.213, Sec. 3, Beixin Rd.,
Xindian Dist., New Taipei City 231,
Taiwan, R.O.C.
www.optoma.com.tw

☎ +886-2-8911-8600
🖷 +886-2-8911-6590
✉ services@optoma.com.tw
asia.optoma.com

Hong Kong
Unit A, 27/F Dragon Centre,
79 Wing Hong Street,
Cheung Sha Wan,
Kowloon, Hong Kong

☎ +852-2396-8968
🖷 +852-2370-1222
www.optoma.com.hk

中国
上海市长宁区
凯旋路 1205 号 5 楼
琉璃奥图码

☎ +86-21-62947376
+86-21-62947375
www.optoma.com.cn

Regulation & Safety Notices

This appendix lists the general notices of your projector.

FCC Notice

This equipment has been tested and found to comply with the limits for a Class B digital device, pursuant to part 15 of the FCC Rules. These limits are designed to provide reasonable protection against harmful interference in residential installation. This equipment generates, uses and can radiate radio frequency energy and if not installed and used in accordance with the instructions, may cause harmful interference to radio communications.

However, there is no guarantee that interference will not occur in a particular installation. If this equipment does cause harmful interference to radio or television reception, detectable by turning the equipment in question off and on, the user is encouraged to try to correct the interference by one or more of the following measures:

- Reorient or relocate the receiving antenna
- Increase the distance between the equipment and the receiver
- Connect the equipment to an outlet on a different circuit than that which the receiver is connected to
- Or consult the dealer or an experienced radio/TV technician for help.

Notice: Shielded cables

All connections to other computing devices must be made using shielded cables to maintain compliance with FCC regulations.

Caution

Changes or modifications not expressly approved by the manufacturer could void the user’s authority, which is granted by the Federal Communications Commission, to operate this projector.

Operation conditions

This device complies with Part 15 of the FCC Rules. Operation is subject to the following two conditions:

1. This device may not cause harmful interference and
2. This device must accept any interference received, including interference that may cause undesired operation.

Notice: Canadian users

This Class B digital apparatus complies with Canadian ICES-003.

Remarque ą l'intention des utilisateurs canadiens

Cet appareil numerique de la classe B est conforme a la norme NMB-003 du Canada.

Declaration of Conformity for EU countries

- EMC Directive 2004/108/EC (including amendments)
- Low Voltage Directive 2006/95/EC
- R & TTE Directive 1999/5/EC (if product has RF function)

Disposal instructions

Do not throw this electronic device into the trash when discarding. To minimize pollution and ensure utmost protection of the global environment, please recycle it.